DWE4001-XE SMALL ANGLE GRINDER 1

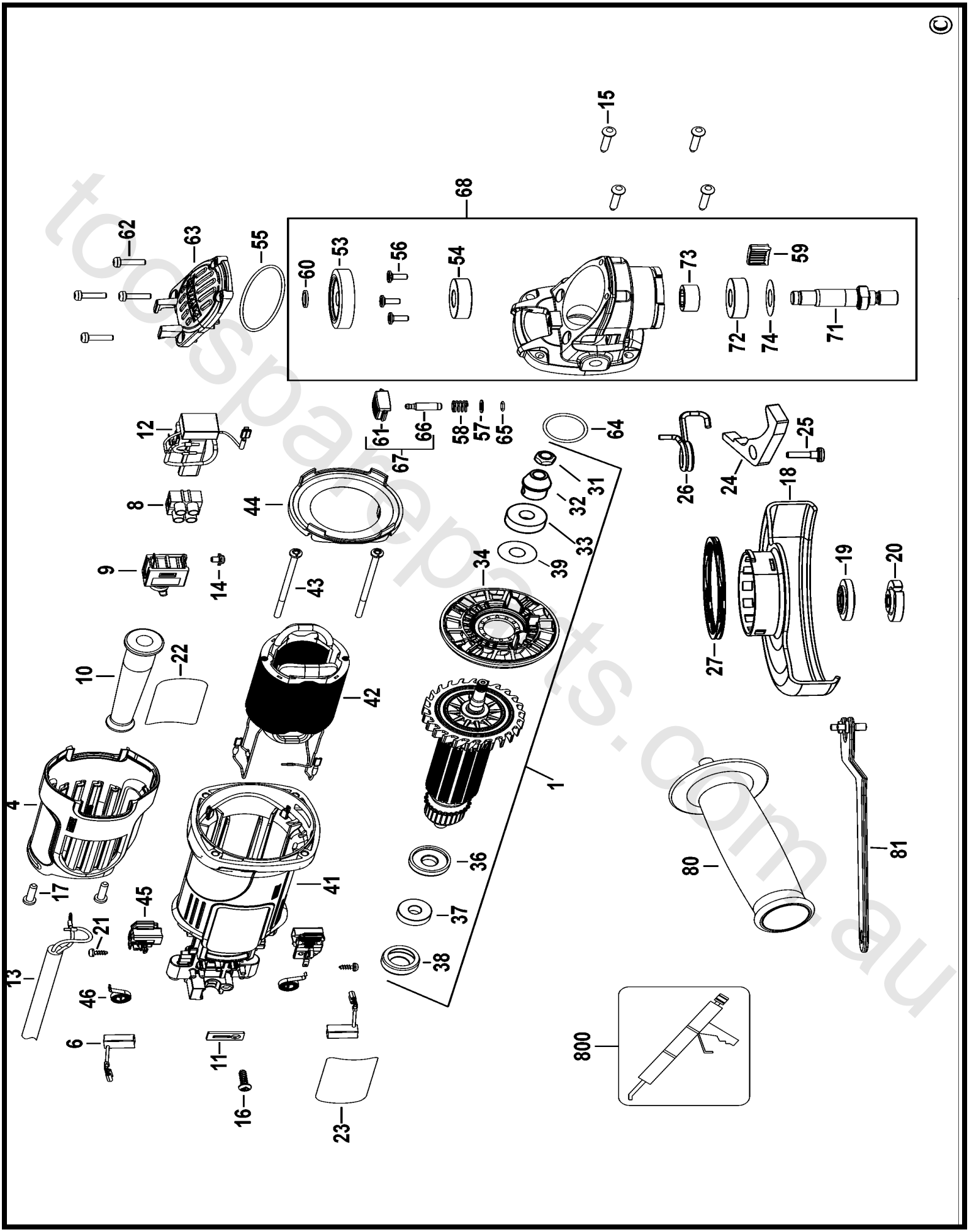

toolspareparts.com.au